Hydraulink

TEE ADAPTORS

G-G-A

JIC MALE X JIC MALE X BSPT MALE
JIC FLARE MALE X JIC FLARE MALE X BSPT MALE
BRANCH TEE

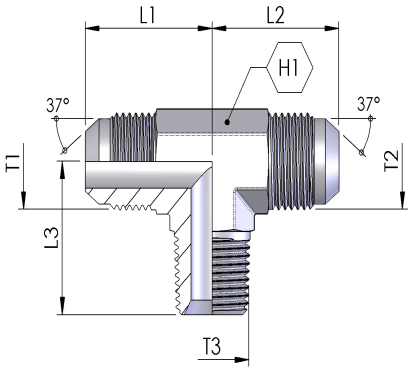

Part Number	T1	T2	T3	H1 (mm)	L1 (mm)	L2 (mm)	L3 (mm)	PN (bar)
G-G-A-070702	7/16-20	7/16-20	1/8-28	12	23	23	20	345
G-G-A-070704	7/16-20	7/16-20	1/4-19	14	27	27	27	275
G-G-A-090904	9/16-18	9/16-18	1/4-19	14	27	27	27	275
G-G-A-090906	9/16-18	9/16-18	3/8-19	19	29	29	31	210
G-G-A-121206	3/4-16	3/4-16	3/8-19	19	32	32	31	210
G-G-A-121208	3/4-16	3/4-16	1/2-14	22	34	34	35	210
G-G-A-141406	7/8-14	7/8-14	3/8-19	26.7	37.6	37.6	35.6	210
G-G-A-141408	7/8-14	7/8-14	1/2-14	22	36	36	35	210
G-G-A-141412	7/8-14	7/8-14	3/4-14	26.2	39	39	40	170
G-G-A-171712	1.1/16-12	1.1/16-12	3/4-14	27	42	42	40	170
G-G-A-212116	1.5/16-12	1.5/16-12	1-11	35	46	46	47	140

Please contact Hydraulink for further details and availability. Hydraulink reserve the right to change technical specifications without notice.